FLOW METERS & INSTRUMENTATION

environmental TECHNOLOGIES

Micro Capacity Flowmeters

Micro capacity flowmeters provide precise volumetric measurement of small quantities of liquids or low flows found in a broad range of industries including automotive, aviation, mining, power, chemical, pharmaceutical, food, paint, petroleum & environmental. Applications include the metering of additives for fuel, consumer products, water treatment & flotation cells, corrosion inhibitors, catalysts, emulsifiers, oils, grease, fragrances, adhesives, solvents, ink & insecticides.

FEATURES

- Compact & economical design suited for OEM's*
- High accuracy & repeatability
- No requirement for flow conditioning
- Stainless steel rotors
- Measures high & low viscosity liquids

** Original Equipment Manufacturers*

REMOTE INSTRUMENTS

Remote options include LCD totalisers, flow rate totalisers & batch controllers. These instruments provide monitoring & control outputs including 4~20mA, scaled pulse, alarms & batch control. Instruments include:

- BT 5 digit reset, 8 digit cumulative totaliser.
- RT 6 digit reset, cumulative totaliser & flow rate.
- EB 6 digit 2 stage batcher & cumulative totaliser.

(Instruments also available with I.S. approvals)

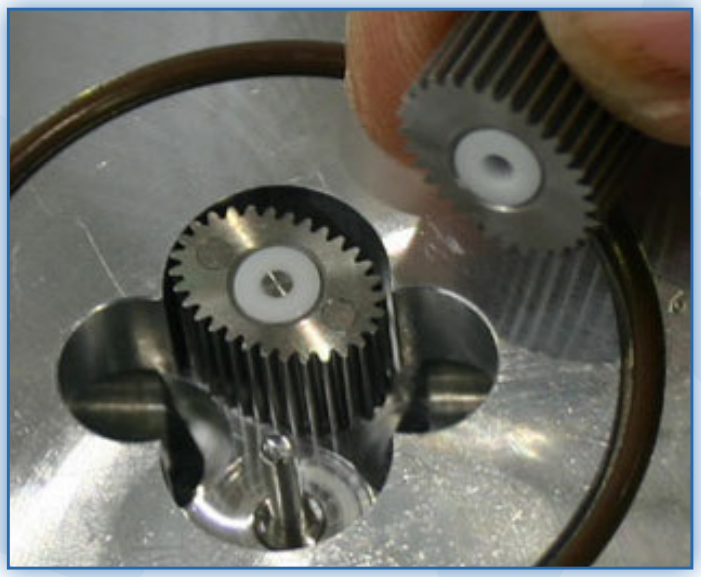

GENERAL SPECIFICATION

Flow rates : 0.5 ~ 550 litres / hr. (0.16~ 145 USgal/hr) *

Sizes : 4, 6 & 8mm (1/8"' ¼" & 3/8" NB)

Materials : All 316 Stainless steel, ceramic bearings

* see also small & large capacity data sheets for other size meters

T: 01423 522911
F: 01423 530043
E: sales@env-technologies.com

Environmental Technologies Ltd.
Ripon Way, Harrogate, HG1 2AU, UK

Registered in England No: 05888341
VAT No: 972 5859 68

Specifications

Model prefix :	EM004	EM006	EM008
Nominal size (inches)	4mm (1/8")	6mm (1/4")	8mm (3/8")
Flow range - litres / hr (US gal./hr)	0.5 ~ 36 (0.13 ~ 9.5)	2 ~ 100 (0.5 ~ 27)	15 ~ 550 (4 ~ 145)
Accuracy @ 3cp	±1% o.r. (± 0.2% with optional RT12 using NLC)		
Repeatability	typically ± 0.03%		
Temperature range	-20ºC ~ +120ºC (-4ºF ~ +250ºF)		
Maximum pressure	34 bar (500 psig)		
Protection class	IP66/67 (NEMA4X)		
Recommended filtering	75 micron (200 mesh) minimum		
Electrical (see options below)			
Output pulse resolution	pulses / litre (pulses / US gallon) - nominal		
Reed switch	2890 (10940)	2100 (7950)	355 (1345)
Hall effect	2890 (10940)	2100 (7950)	710 (2690)
** Reed switch output	30Vdc x 200mA max.		
Hall effect output (NPN)	3 wire open collector, 5~24Vdc max., 20mA max.		
Optional remote functions			
Display	flowrate, total (accumulative & resettable)		
Preset batching	1 & 2 stage high speed batch control		
Optional outputs from remote instruments			
Flow	4 ~ 20mA, high & low flow rate alarms		
Pulse	scaled pulse (programmable), pulse amplifier		

* Max. flow is to be reduced as viscosity increases, max. press. drop 100Kpa. (15 psi)

** Maximum thermal shock 10ºC (50ºF) / min. applies to the reed switch

Model coding

EM004	4mm (1/8")
EM006	6mm (1/4")
EM008	8mm (3/8")

Body material

S	316 Stainless Steel

Rotor material

5	316 stainless steel

Bearing type

1	Ceramic

O-ring material

1	Viton (standard) -15~+200ºC (-5~+400ºF)
2	Ethylene Propylene Rubber -150ºC (300ºF) max.
3	Teflon encapsulated viton -150ºC (300ºF) max.
4	Buna-N (Nitrile) -65~+100ºC (-53~+212ºF)

Temperature limits

- 2	120ºC (250ºF)

Process connections

1	BSP female threaded
2	NPT female threaded

Cable entries

0	DIN plug with 3~6mm cable gland
1	# Potted with 3 metres of cable

 # available only in OEM quantities

Model No. Example

EM006 | S | 5 | 1 | 1 - 2 | 1 | 0

Overall dimensions

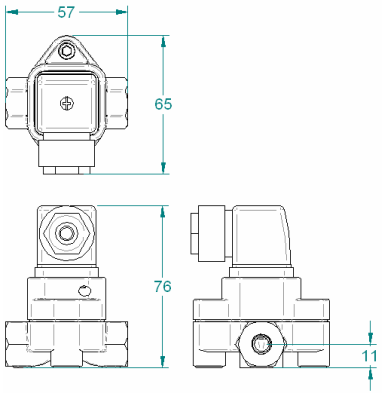

OPTION 1 - Din Plug

Models EM004~EM006

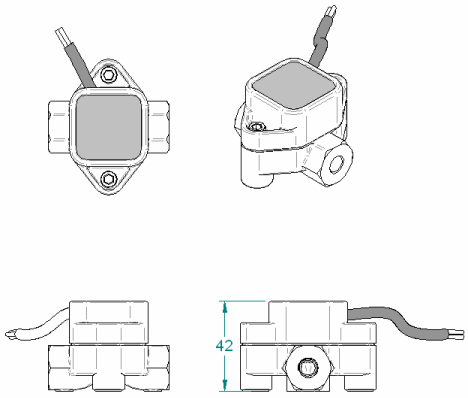

OPTION 2 - Flying Lead

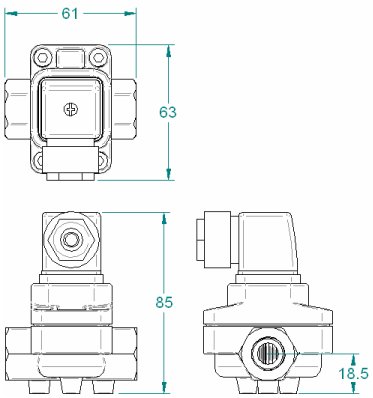

OPTION 1 - Din Plug

Model EM008

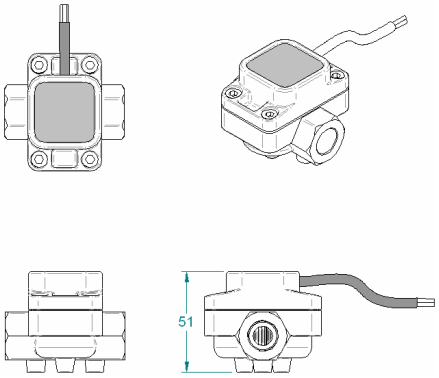

OPTION 2 - Flying Lead

T: 01423 522911
F: 01423 530043
E: sales@env-technologies.com

Environmental Technologies Ltd.
Ripon Way, Harrogate, HG1 2AU, UK

Registered in England No: 05888341
VAT No: 972 5859 68